RIFLON

riflon.com

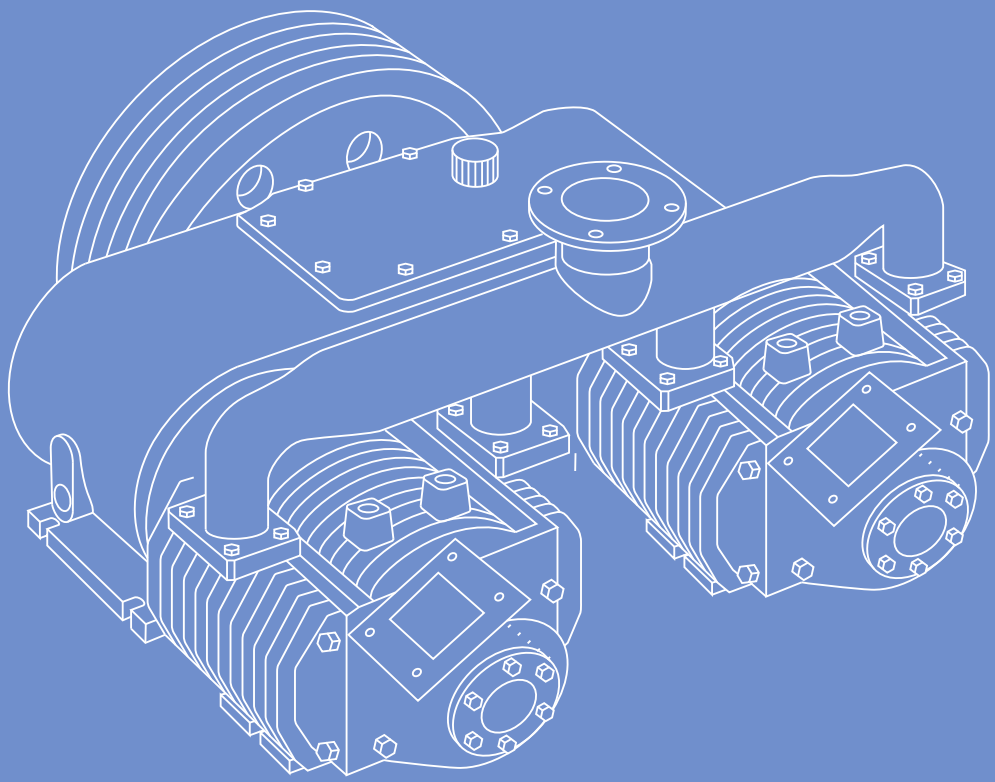

Pendulum oil-free compressor

KM-12-2R1

KM-12-2R1 SERIES
PENDULUM OIL-FREE COMPRESSOR

Pendulum oil-free compressor KM-12-2R1

KM-12-2R1 is designed for pneumatic unloading and vacuum loading of any bulk materials.

Low-pressure rotary pendulum compressors are used to unload bulk materials, for example: cement, flour, sugar, granules, grain, feedstuff. They are also used as parts of pneumatic transportation systems. The devices are installed on tank semi-trailers and articulated lorries. In such cases, they are driven by diesel engines or electric motors via cardan joints or pulleys.

Ability to build pressure of up to 2.5 bars makes them suitable for pneumatic transportation of high density (more than 2 t/m^3) bulk materials. They pump frequent pulses of air, which facilitates effective unloading of low density materials (granulates), prevents formation of vortexes, as well as pneumatic line clogging.

A crank gear converts oscillating motions of the rotor blades into rotating motion of the flywheel. This innovation makes pendulum compressors KM-12-2R1 compact and more effective, decreases level of noise and vibration. In order to ensure their smooth motion inside the casing, the rotor blades are coated with self-lubricating carbon and a special material on their edges. Such surfaces do not require additional lubrication, so, as the result, compressed air does not contain oil. Valves are equipped with special highly reliable limiting units.

Technical specifications:

Name of parameters	KM-12-2R1
Capacity, L/min	12000
Compressor type	Pendulum
Pressure/vacuum, MPa	0,2/-0,07
Speed, rpm	1000
Rated power, kW	44
Unladen weight, kg	376
Overall dimensions, mm	850x900x600
Ability to operate as a vacuum pump	yes

Pendulum oil-free compressor KM-12-2R1. Dimentions.

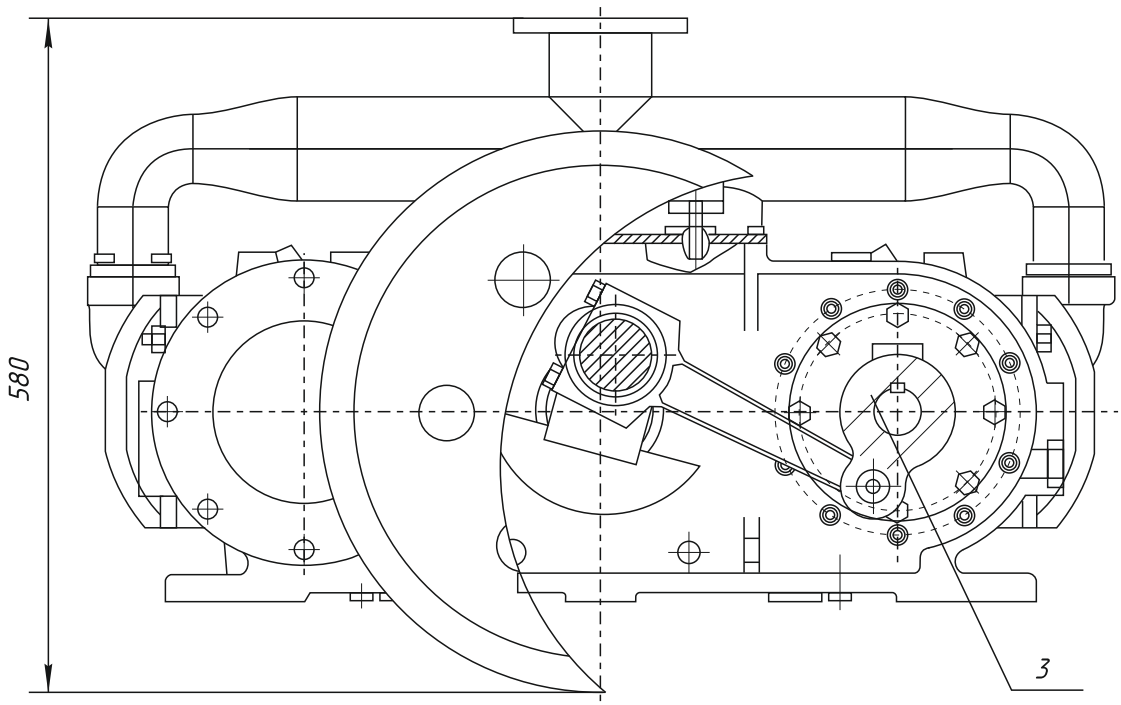

Picture 1 - Pendulum oil-free compressor KM-12-2R1. Structure.

3	Crankgear

Pendulum oil-free compressor KM-12-2R1. Dimentions.

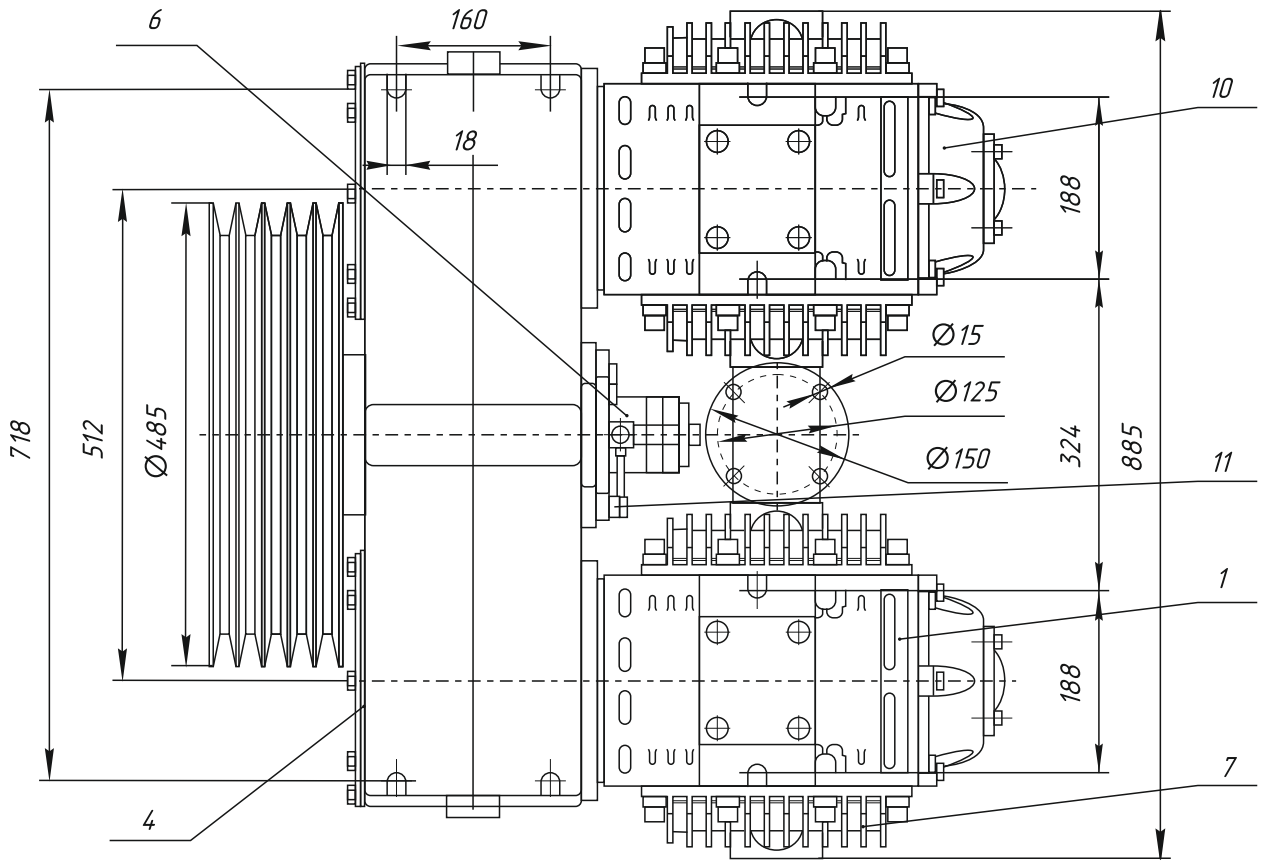

Picture 2 - Pendulum oil-free compressor KM-12-2R1. Structure.

1	The slave cylinder
4	Front cover
6	Oil pump
7	Exhaust valve box
10	Flanged back cover for filter connection
11	Oil drain plug

Pendulum oil-free compressor KM-12-2R1. Dimentions.

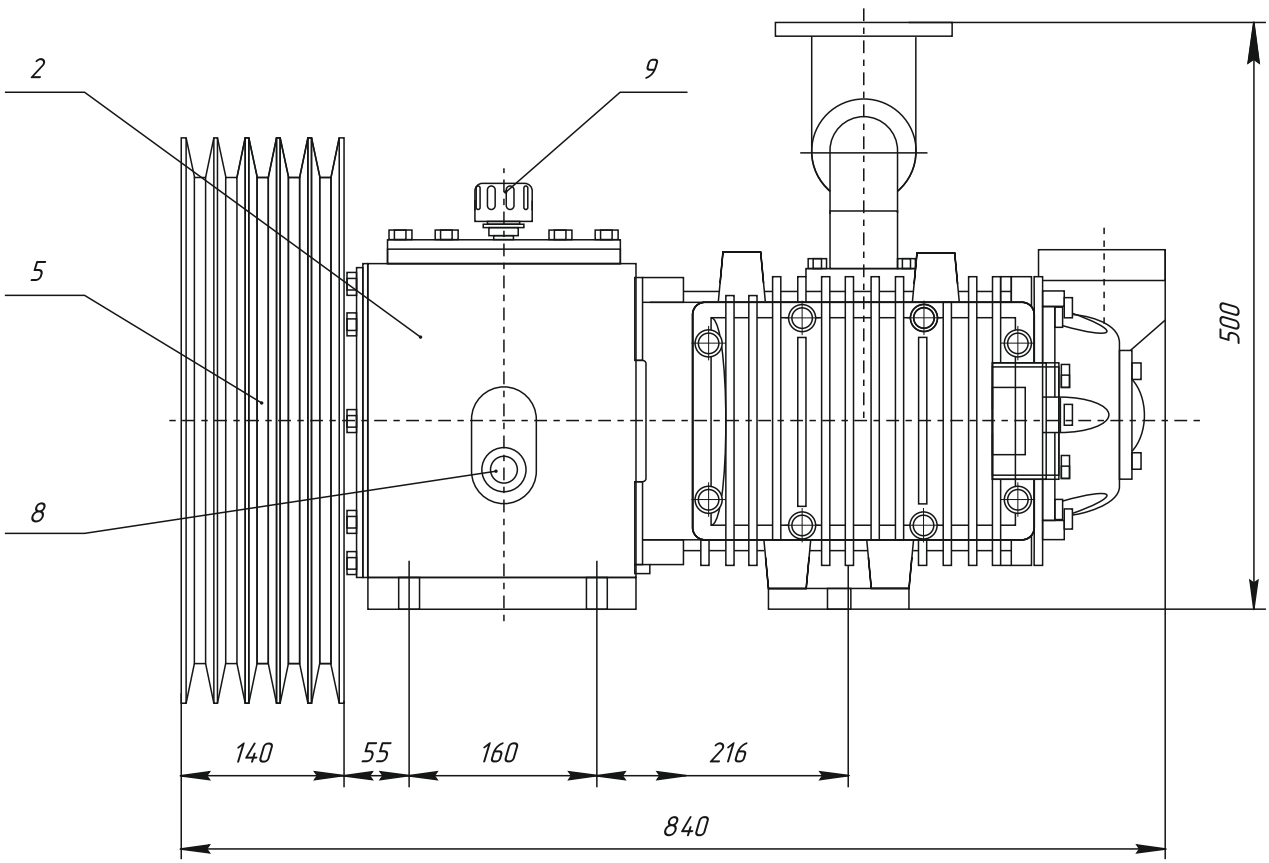

Picture 3 - Pendulum oil-free compressor KM-12-2R1. Structure.

2	Body
5	Drive wheel
8	Oil level indication
9	Lidded oil filler

RIFLON

riflon.com

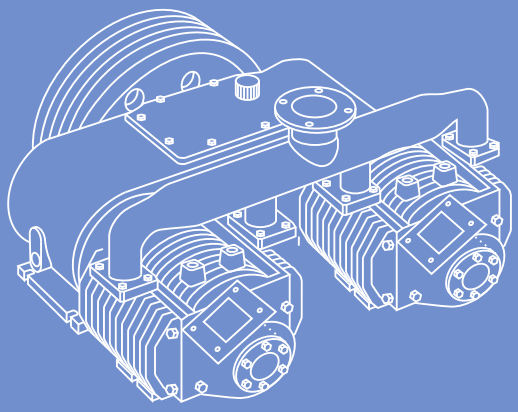

phone:
+1 (512) 861-19-64

e-mail: sales@riflon.com
www.riflon.com